Date	SYM	REVISION RECORD	AUTH	DR.	CK.
12/04/15	J	Added Pad Location Dim.	T.B.	B.S.	
12/11/15	K	Changed micro sec. to milliseconds	T.B.	B.S.	
10/18/19	L	Added Weight of the part	T.B.	B.S.	

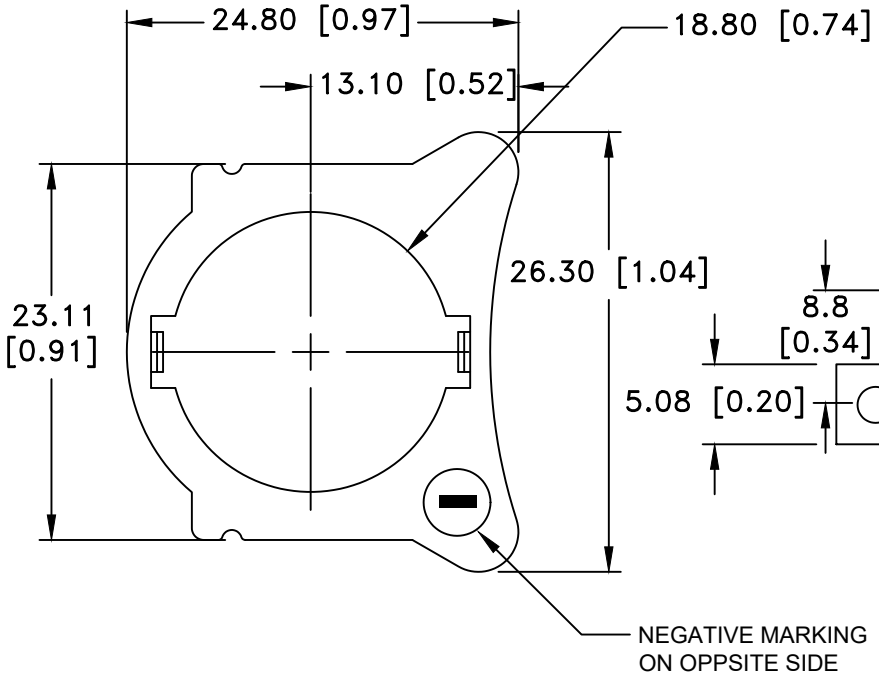

INSULATOR

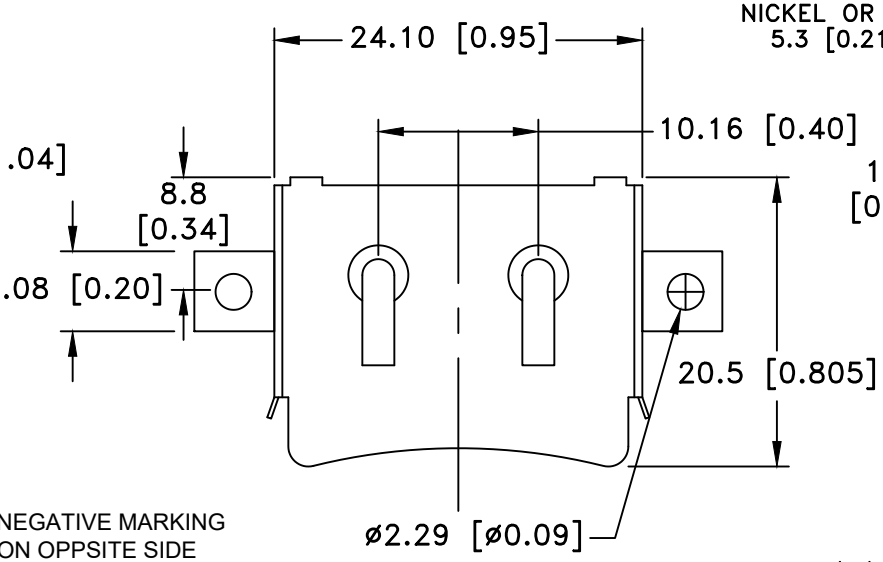

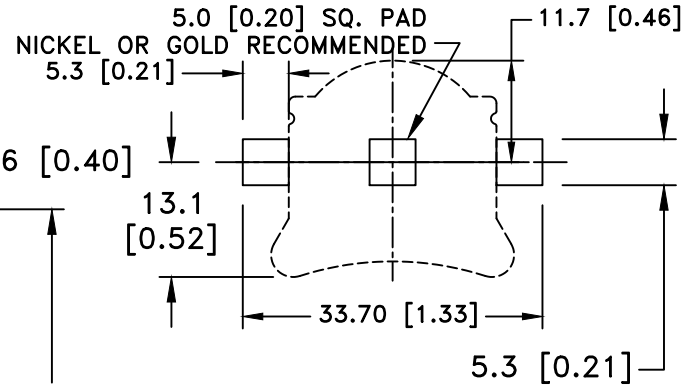

PCB LAYOUT

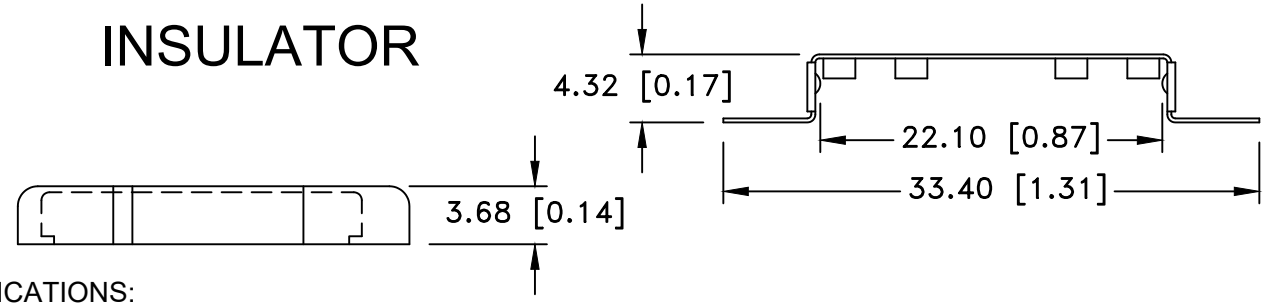

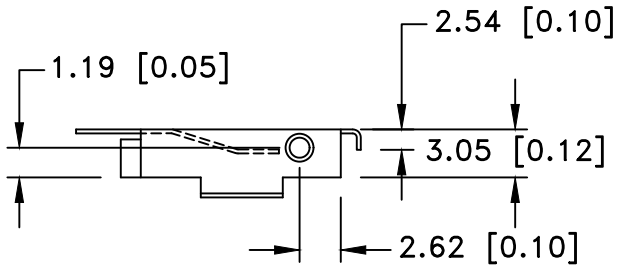

SPECIFICATIONS:

* Holder material- Polypropylene, AV161 PP, Off White
* UL Flammability Rating: UL 94-HB File No. E108370
* Contacts : Phosphor Bronze C5191, Nickel Plated 80-150u thickness
* Vibration test: 10-50-10 hz sweeped in 60 seconds
  x,y,z direction: 1 hour each direction
* Result: no dislodgement of the cell or damage
  no discontinuity over 10 micro-seconds
* Shock test: half sine wave acceleration 150g.
  6 milliseconds 3 shock pulses each direction per axis, total of 18 pulses
* Result: no evidence of physical damage
* ROHS COMPLIANT

Estimated Weight: 1.73g

Operational temperature is -40c to +100c

Tolerance (Except as noted)	MPD Memory Protection Devices, Inc 200 Broad Hollow Road, Farmingdale, New York 11735		
decimal ±.5 (.020)		Scale	Drawn By B.S. Approved By T.B.
Fractional ± .8 (.030)	Title CR2032 SURFACE MOUNT BATTERY RETAINER WITH INSULATOR		
Angular ± 3°	Date 10/18/19	Drawing Number BHX1-2032-SM	